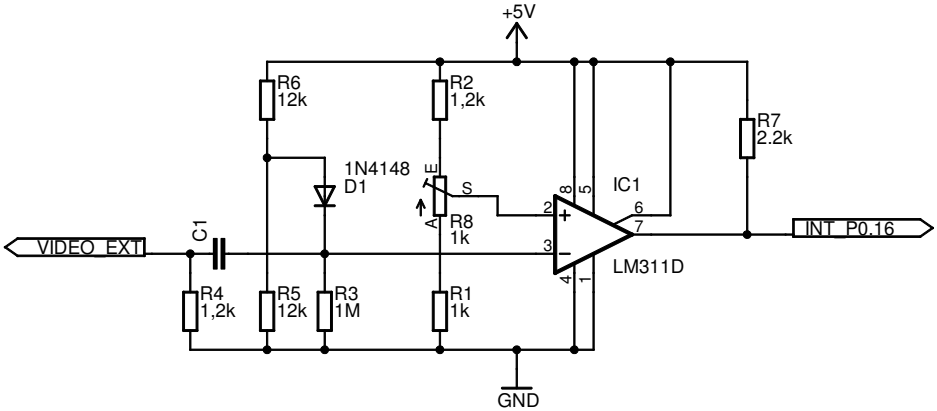

23.08.2007 20:50:07 C:\Programme\EAGLE-4.15\projects\SyncSeparator\SyncSep.scl