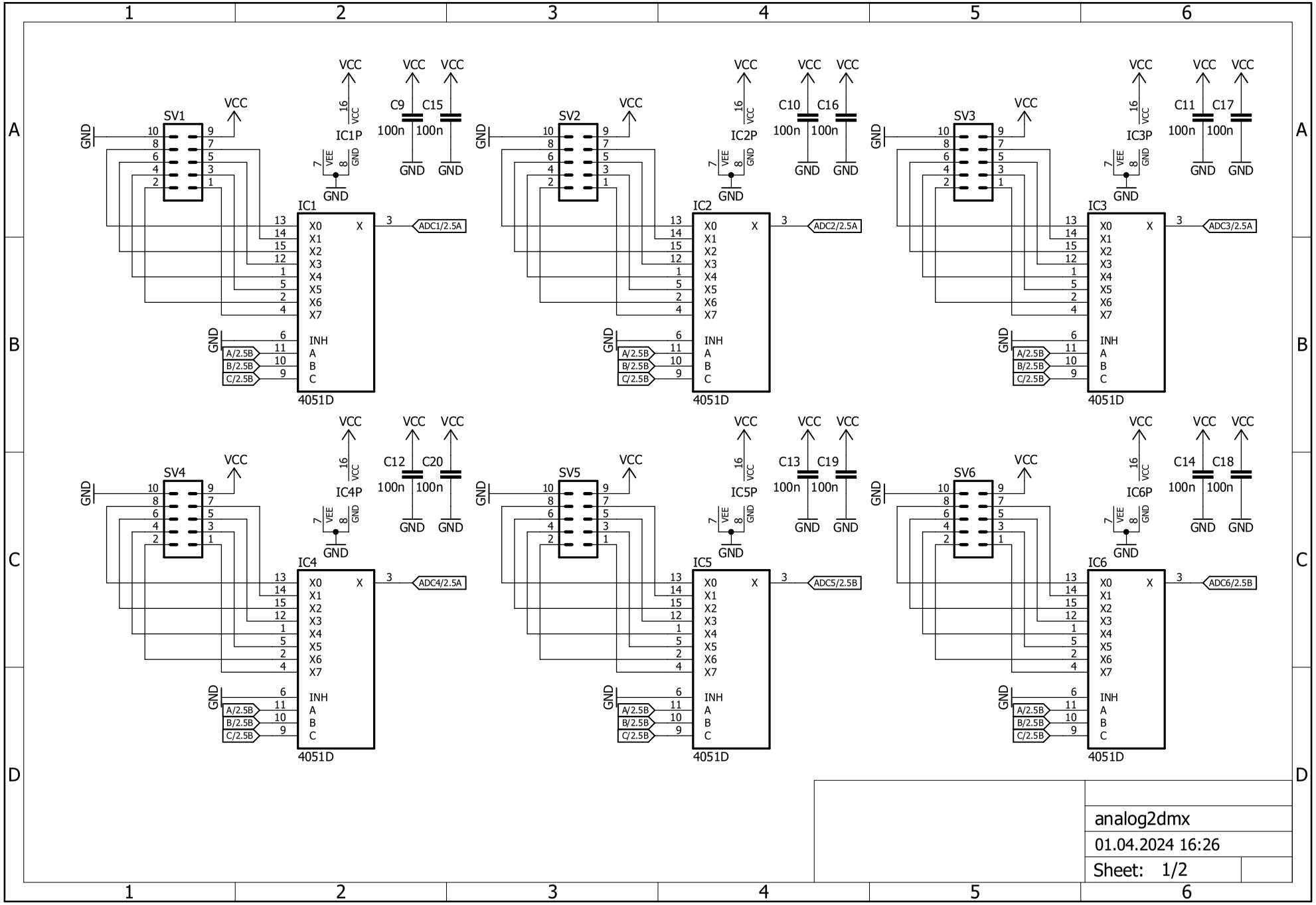

analog2dmx

01.04.2024 16:26

Sheet: 1/2

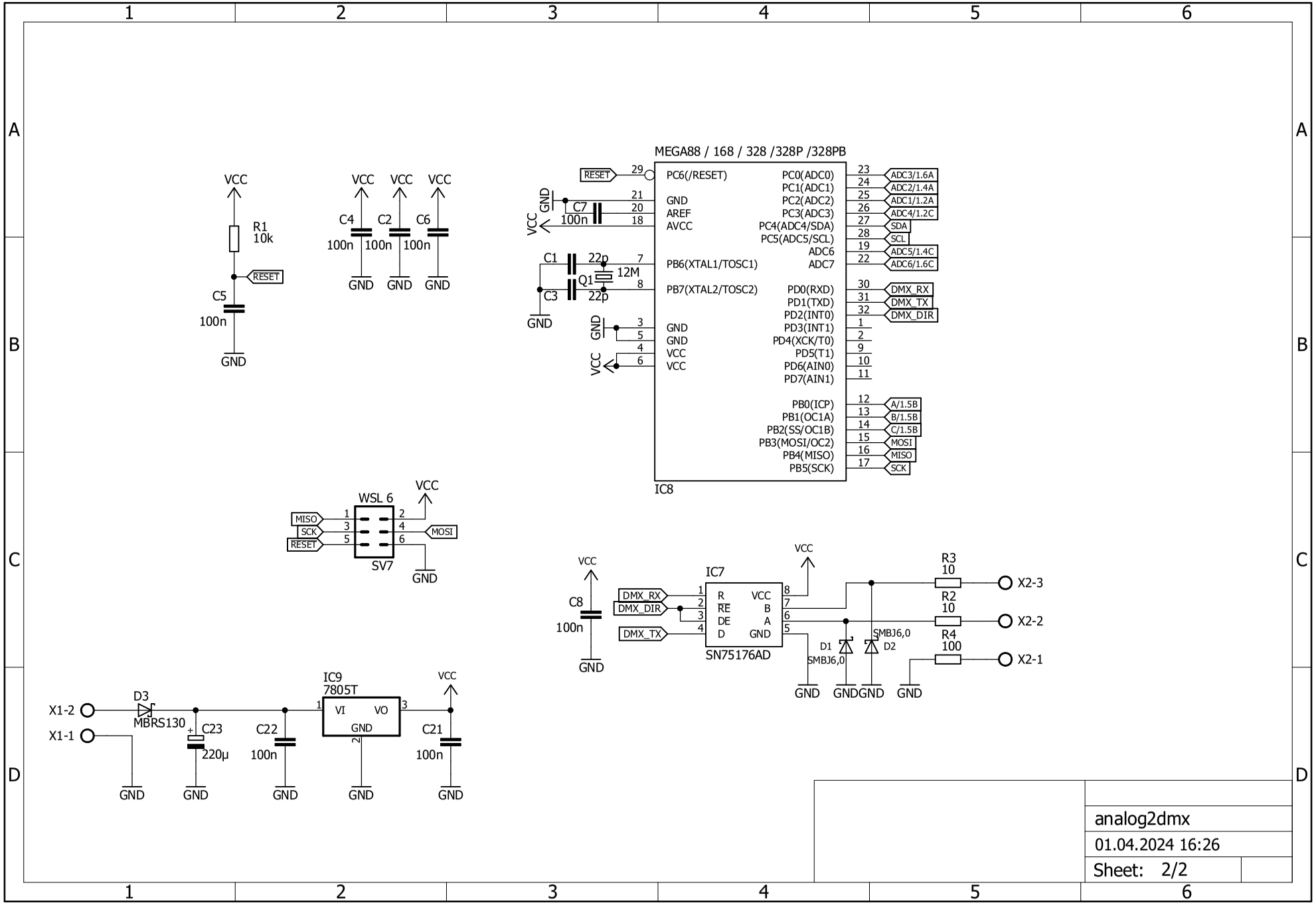
MEGA88 / 168 / 328 /328P /328PB
IC8
PC6(/RESET)
GND
AREF
AVCC
PB6(XTAL1/TOSC1)
PB7(XTAL2/TOSC2)
GND
GND
VCC
VCC
PC0(ADC0)
PC1(ADC1)
PC2(ADC2)
PC3(ADC3)
PC4(ADC4/SDA)
PC5(ADC5/SCL)
ADC6
ADC7
PD0(RXD)
PD1(TXD)
PD2(INT0)
PD3(INT1)
PD4(XCK/T0)
PD5(T1)
PD6(AIN0)
PD7(AIN1)
PB0(ICP)
PB1(OC1A)
PB2(SS/OC1B)
PB3(MOSI/OC2)
PB4(MISO)
PB5(SCK)
RESET
ADC3/1.6A
ADC2/1.4A
ADC1/1.2A
ADC4/1.2C
SDA
SCL
ADC5/1.4C
ADC6/1.6C
DMX_RX
DMX_TX
DMX_DIR
A/1.5B
B/1.5B
C/1.5B
MOSI
MISO
SCK
C7
100n
C1
22p
Q1
12M
C3
22p
VCC
R1
10k
RESET
C5
100n
GND
C4
C2
C6
100n
100n
100n
WSL 6
SV7
MISO
SCK
RESET
MOSI
IC7
SN75176AD
R
RE
DE
D
VCC
B
A
GND
DMX_RX
DMX_DIR
DMX_TX
C8
100n
R3
10
R2
10
R4
100
X2-3
X2-2
X2-1
D1
SMBJ6,0
D2
SMBJ6,0
IC9
7805T
VI
VO
GND
X1-2
X1-1
D3
MBRS130
C23
220µ
C22
100n
C21
100n
analog2dmx
01.04.2024 16:26
Sheet: 2/2